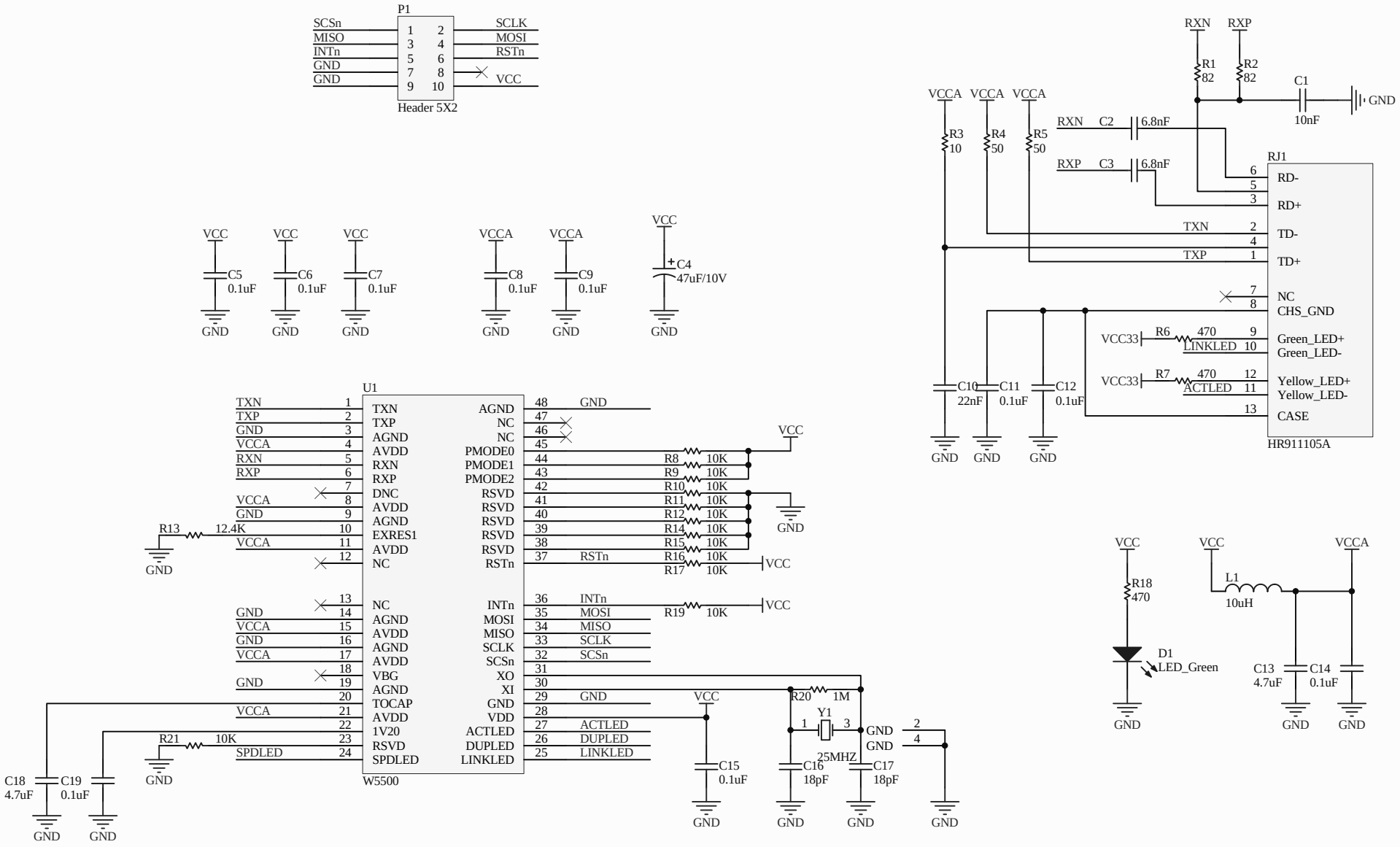
P1
SCSn
MISO
INTn
GND
GND
SCLK
MOSI
RSTn
VCC
Header 5X2
RXN
RXP
R1 82
R2 82
C1 10nF
GND
VCCA
R3 10
R4 50
R5 50
RXN C2 6.8nF
RXP C3 6.8nF
RJ1
RD-
RD+
TXN
TD-
TXP
TD+
NC
CHS_GND
VCC33
R6 470
LINKLED
Green_LED+
Green_LED-
R7 470
ACTLED
Yellow_LED+
Yellow_LED-
CASE
HR911105A
C10 22nF
C11 0.1uF
C12 0.1uF
VCC
C5 0.1uF
C6 0.1uF
C7 0.1uF
C8 0.1uF
C9 0.1uF
C4 47uF/10V
U1
TXN
TXP
AGND
AVDD
RXN
RXP
DNC
EXRES1
NC
VBG
TOCAP
1V20
RSVD
SPDLED
PMODE0
PMODE1
PMODE2
RSTn
INTn
MOSI
MISO
SCLK
SCSn
XO
XI
VDD
ACTLED
DUPLED
LINKLED
R8 10K
R9 10K
R10 10K
R11 10K
R12 10K
R14 10K
R15 10K
R16 10K
R17 10K
R19 10K
R13 12.4K
R21 10K
R20 1M
Y1 25MHZ
C15 0.1uF
C16 18pF
C17 18pF
C18 4.7uF
C19 0.1uF
W5500
R18 470
D1 LED_Green
L1 10uH
C13 4.7uF
C14 0.1uF